DIGITAL MULTIMETER

OPERATION MANUAL

CONTENTS

1.	SAFETY INFORMATION	…1
1.1	PRELIMINARY	…1
1.2	DOS AND DON'TS	…2
1.3	SYMBOLS	…3
1.4	MAINTENANCE	…4
2.	**DESCRIPTION**	…6
2.1	NAMES OF PARTS	…7
2.2	SWITCH, BUTTONS AND INPUT JACKS	…8
2.3	**LIQUID-CRYSTAL DISPLAY (LCD)**	…10
3.	**SPECIFICATIONS**	…12
3.1	GENERAL SPECIFICATIONS	…12
3.2	TECHNICAL SPECIFICATIONS	…13
4.	**OPERATION INSTRUCTION**	…23
4.1	MISCONNECTION ALARM	…23
4.2	HOLDING READINGS	…24
4.3	SWITCHING FUNCTIONS	…24
4.4	SWITCHING RANGES	…24
4.5	SWITCHING BETWEEN FREQUENCY/DUTY	…25
4.6	SWITCHING TO RELATIVE MEASUREMENT	…25
4.7	BACK LIGHT	…26
4.8	LASER BEAM	…27
4.9	AUTO POWER OFF	…28

4.10 PREPARING FOR MEASUREMENT …29
4.11 MEASURING RELATIVE HUMIDITY …29
4.12 MEASURING TEMPERATURE (WITH THERMO-RESISTOR) …30
4.13 MEASURING DC VOLTAGE …31
4.14 MEASURING AC VOLTAGE …32
4.15 MEASURING DC MILLIVOLTAGE …33
4.16 MEASURING AC MILLIVOLTAGE …34
4.17 MEASURING DC CURRENT …35
4.18 MEASURING AC CURRENT …37
4.19 MEASURING FREQUENCY …38
4.20 MEASURING DUTY …38
4.21 MEASURING RESISTANCE …39
4.22 MEASURING CAPACITANCE …40
4.23 TESTING DIODE …40
4.24 TESTING CONTINUITY …41
4.25 TESTING TRANSISTOR …42
4.26 MEASURING TEMPERATURE (WITH INFRARED THERMO-SENSOR) …44
5. MAINTENANCE …46
5.1 REPLACING THE BATTERIES …46
5.2 REPLACING FUSE …46
5.3 REPLACING TEST LEADS …48
6. ACCESSORIES …49

1. SAFETY INFORMATION

⚠ WARNING

BE EXTREMELY CAREFUL WHEN USING THIS METER. Improper use of this device can result in electric shock or destruction of the meter. Take all normal safety precautions and follow the safeguards suggested in this manual.

To exploit full functionality of the meter and ensure safe operation, please read carefully and follow the directions in this manual.

This meter complies with the general technical requirements for the GB/T 19978-92 multimeter as well as the safety requirements for GB4793.1-1995 (IEC-1010-1:1990) concerning electronic measuring instruments, with pollution degree 2 and overvoltage at CAT II 1000V/ CAT III 600V.

Follow all safety and operation instructions to ensure safe use of the meter.

With proper use and care, this digital multimeter will give you years of satisfactory service.

1.1 PRELIMINARY

1.1.1 When using the meter, the user must observe all normal safety rules concerning:

1) general protection against electric shock
2) protection of the meter against misuse

1.1.2 When the meter is delivered, check whether it has been damaged in transit.

1.1.3 After being stored and delivered under harsh conditions, the meter should be checked and confirmed whether any damages have been incurred.

1.1.4 Test leads must be kept in good condition. Check whether the insulation on test leads has been damaged and any wire has been exposed.

1.1.5 Use the test leads supplied to ensure operation safety. If required, they must be replaced with test leads of the same model or class.

1.2 DOS AND DON'TS

1.2.1 Use the right input jack, function and range.

1.2.2 Do not take measurements that exceed the protection limit values indicated in the specifications

1.2.3 Do not touch the metal tips of the test leads when the meter is connected to the circuit to be measured.

1.2.4 Keep your fingers behind the probe barriers when taking a measurement with an effective voltage above 60V DC or 30V rms AC.

1.2.5 Do not take voltage measurement if the value between the terminals and earth ground exceeds 1000V.

1.2.6 Select the highest range if the value scale to be measured in the manual range is unknown.

1.2.7 Do not connect the meter to any voltage source while the rotary selector is in the current, resistance, capacitance, diode, continuity range.

1.2.8 Disconnect the test leads from the circuit under test before turning the rotary selector to change functions.

1.2.9 Be careful that high voltage pulses at test points may damage the meter when measurements are being taken on the circuit of TV switch power.

1.2.10 Do not measure the resistance，capacitance, diode or continuity of live circuits.

1.2.11 Do not take capacitance measurements until the capacitor to be measured has been fully discharged.

1.2.12 Do not use the meter near explosive gases, steam or dirt.

1.2.13 Stop using the meter if any abnormalities or faults are observed.

1.2.14 Do not use the meter unless its rear case is securely fastened in its original position.

1.2.15 Do not store or use the meter in areas exposed to direct sunlight, at high temperature or with high relative humidity.

1.3 SYMBOLS

⚠ - important safety information; refer to the operation manual.

⚠ - dangerous voltage may be present.

⧈ - double insulation（Protection class II）.

CAT II - overvoltage (installation) category II, pollution degree 2 per IEC1010-1, referring to the level of impulse withstand voltage protection provided.

CAT III - overvoltage (installation) category III, pollution degree 2 per IEC1010-1, referring to the level of impulse withstand voltage protection provided.

CE - conforms to European Union Directive

⏚ - earth ground

- fuse

- battery low

1.4 MAINTENANCE

1.4.1 Do not attempt to remove the rear case to adjust or repair the meter. Such actions should only be performed by a technician who fully understands the meter and the danger involved.

1.4.2 Disconnect the test leads from all sources of electric current before opening the **battery cover** of the mete.

1.4.3 To avoid any electric shock caused by error readings, replace the batteries immediately when the "▭" sign appears on the display.

1.4.4 To avoid fire hazards, the replacement fuse must meet the specified voltage and current at F 10A/250V (quick acting).

1.4.5 Use damp cloth and mild detergent to clean the meter; do not use abrasives or solvents.

1.4.6 Turn the rotary selector to OFF position to switch off the power when the meter is not in use.

1.4.7 Remove the batteries to avoid damages to the meter if it will idle for a long time.

2. DESCRIPTION

- This meter is a portable professional measuring instrument with large LCD to show three lines of readings, as well as back light for easily reading. The 'single-hand operation' design for the range switch makes measurement simple and easy. Overload protection and low battery indication are provided. It is an ideal multi-function instrument with scores of practical applications for professional, workshop, school, hobby and home use.
- The meter is devised with light and sound alarm to prevent misconnection of test leads and provide additional protection against damages caused by improper operation.
- The humidity and temperature functions are suitable for measuring ambient humidity and temperature, as well as temperature of objects.
- The digital multimeter can perform measurements of AC/DC voltage and current, resistance，frequency, duty, capacitance, as well as continuity and diode test.
- The non-contact infrared temperature measurement function makes it more convenient and safe to measure temperatures.
- Both the reading and unit of measurement are displayed on the LCD.
- Both auto range and manual range are available

- This meter is equipped with auto power off function.
- This meter is equipped with reading hold function.
- This meter is equipped with relative measurement function.

2.1 NAMES OF PARTS

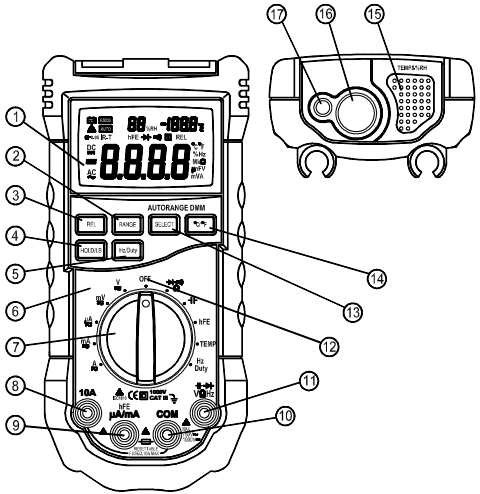

1) LCD **(Liquid-crystal display)**
2) Auto/manual switch button (RANGE)
3) Relative measurement switch button (REL)
4) Reading hold/back light button (HOLD/B.L.)
5) Hz/duty switch button (Hz/DUTY)

6) Panel
7) Rotary selector
8) 10A input jack
9) mA/μA/hFE input jack
10) COM input jack
11) V、Ω、Hz、⊣⊢、▶⊢ input jack
12) OFF - switch of power
13) Function switch button (SELECT)
14) ℃/℉ switch button (℃/℉)
15) Humidity & Temperature sensor
16) Infrared THERMO-Sensor
17) Laser Pointer

2.2 SWITCH, BUTTONS AND INPUT JACKS

HOLD/B.L. Button
- for holding the reading or control backlight

SELECT Button
- for switching among measuring functions

RANGE Button
- for switching between auto and manual ranges.

Hz/DUTY Button
- for switching between Hz and duty measurement.

REL Button
- for switching to relative measurement.

℃/℉ Button (℃/℉)
- for switching between ℃ and ℉

Rotary Selector
- for selecting functions and ranges.

OFF Position
- for turning off the power.

10A Input Jack
- for measuring current 0 ~ 10A.

mA/μA/hFE Input Jack
- for measuring current 0 ~ 400mA and hFE

V、Ω、Hz、⊣⊢、▶⊢ Input Jack
- for measuring voltage, resistance, frequency, duty, capacitance, diode, and continuity.

COM Input Jack
- common input connection for current, voltage, resistance, frequency, duty, capacitance, diode, continuity, hFE measurement.

Humidity Sensor
- for measuring humidity.

Infrared THERMO-Sensor
- for infrared temperature measuring

Laser Pointer
- for take aim object (infrared temperature measuring)

2.3 LIQUID-CRYSTAL DISPLAY (LCD)

1) Temperature indicator
2) Humidity indicator
3) Main indicator

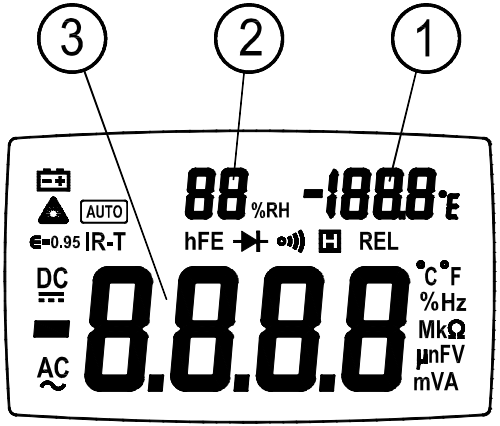

~ AC	**AC** (alternating current)
DC	**DC** (direct current)
	AC or DC (alternating current or direct current)
	Diode
	Continuity buzzer
H	Reading being held
hFE	Transistor

REL	Relative measurement
AUTO	Auto range
	Battery low
℃	Celsius units (Temperature)
℉	Fahrenheir units (Temperature)
%RH	Relative Humidity units
F	Farad (Capacitance)
Ω	Ohms (Resistance)
V	Volts (Voltage)
A	Amperes (Current)
Hz	Hertz (Frequency)
%	Duty Cycle
	Laser Pointer
IR-T	Infrared Temperature
ε = 0.95	Emissivity
n、µ、m、k、M	Unit of measure prefixes: nano, micro, milli, kilo and mega

3. SPECIFICATIONS

Calibration is required once a year, to be carried out at a temperature between 18°C and 28 °C (64°F to 82°F) and relative humidity below 75%.

3.1 GENERAL SPECIFICATIONS

3.1.1 The meter is devised with light and sound alarm to prevent test leads misconnection.

3.1.2 Auto range and manual range options are available.

3.1.3 Overrange protection is provided for all ranges.

3.1.4 Maximum voltage between terminals and earth ground: 1000V DC or rms AC

3.1.5 Operating altitude: max. 2000 meters (7000 ft.)

3.1.6 Display: LCD, 3 readings at the same time

3.1.7 Maximum value display: 3999 digits

3.1.8 Polarity indication: automatic; '-' for negative polarity.

3.1.9 Overrange indication: '0L' or '-0L'

3.1.10 Sampling time: approx. 0.4 second per sample

3.1.11 Unit indication: function and unit.

3.1.12 Auto power off time: 30 min.

3.1.13 Specification of resettable fuse: F1 500mA/250V

3.1.14 Fuse protection: F2 10A/250V (quick acting).

3.1.15 Operating power : 1.5V×3 AAA batteries

3.1.16 Battery low indication: '▭', on LCD

3.1.17 Temperature factor: < 0.1×Accuracy /℃

3.1.18 Operating temperature: 0℃ to 40℃（32°F to 104°F）

3.1.19 Storage temperature: -10℃ to 50℃（10°F to 122°F）

3.1.20 Dimension: 195×92×55mm

3.1.21 Weight: approximate 400g（including batteries）

3.2 TECHNICAL SPECIFICATIONS

Ambient temperature: 23±5℃ Relative humidity: < 75%

3.2.1 DC Voltage

Range	Resolution	Accuracy
40mV	0.01mV	± (0.7% of reading + 2 digits)
400mV	0.1mV	
4V	1mV	
40V	10mV	
400V	100mV	
1000V	1V	

- Input Impedance: 10MΩ
- Overload protection:
  40mV~400mV range: 250V DC or rms AC,
  4V-1000V ranges: 1000V DC or 750V rms AC.
- Max. input voltage: 1000V DC or 750V rms AC

NOTE:

At small voltage range, unsteady readings will appear before the test leads contact the circuit. This is normal because the meter is highly sensitive. When the test leads contact

the circuit, the true reading will be shown.

3.2.2 AC Voltage

Range	Resolution	Accuracy
40mV	0.01mV	± (0.8% of reading + 3 digits)
400mV	0.1mV	
4V	1mV	
40V	10mV	
400V	100mV	
750V	1V	± (1.0% of reading + 3 digits)

- Input Impedance: 10MΩ
- Overload protection:
  40mV~400mV range: 250V DC or rms AC,
  4V-750V ranges: 1000V DC or rms 750V AC.
- Max. input voltage: 1000V DC or rms 750V AC
- Frequency range: 40 to 400Hz
- Response: average, calibrated in rms of sine wave

NOTE:

At small voltage range, unsteady readings will appear before the test leads contact the circuit. This is normal because the meter is highly sensitive. When the test leads contact the circuit, the true reading will be shown.

3.2.3 DC Current

Range	Resolution	Accuracy
400μA	0.1μA	±（1.2% of reading + 3 digits）
4000μA	1μA	
40mA	10μA	
400mA	100μA	
4A	1mA	±（2.0% of reading + 10digits）
10A	10mA	

- Overload protection:
  μA、mA ranges: resettable fuses F1 500mA/250V
  10A range: F2 10A/250V fuse (quick acting).
- Max. input current:
  mA jack（μA ranges）: 4mA,
  mA jack（mA ranges）: 400mA,
  10A jack: 10A
- voltage drop：
  400μA ranges: 40mV,
  4000μA ranges: 400mV,
  40mA ranges: 40mV,
  400mA ranges: 400mV,
  4A range: 40mV
  10A range: 100mV

3.2.4 AC Current

Range	Resolution	Accuracy
400μA	0.1μA	±（1.5% of reading + 5 digits）
4000μ A	1μA	
40mA	10μ A	
400mA	100μA	
4A	1mA	±（3.0% of reading + 10 digits）
10A	10mA	

- Overload protection:
  μA、mA ranges: resettable fuses F1 500mA/250V
  10A range: F2 10A/250V fuse (quick acting),.
- Max. input current:
  mA jack（μA ranges）: 4mA,
  mA jack（mA ranges）: 400mA,
  10A jack: 10A
- voltage drop：
  400μA ranges: 40mV,
  4000μA ranges: 400mV,
  40mA ranges: 40mV,
  400mA ranges: 400mV,
  4A range: 40mV
  10A range: 100mV
- Frequency range: 40 to 400Hz
- Response: average, calibrated in rms of sine wave

3.2.5 Resistance

Range	Resolution	Accuracy
400Ω	0.1Ω	±(1.2% of reading + 2 digits)
4kΩ	1Ω	
40kΩ	10Ω	
400k(	100Ω	
4M(	1kΩ	
40M(	10kΩ	± (2.0% of reading + 5 digits)

- Open circuit voltage: ~0.25V
- Overload protection: 250V DC or rms AC

3.2.6 Capacitance

Range	Resolution	Accuracy
40nF	10pF	±（3.0% of reading + 3 digits）
400nF	0.1nF	
4μF	1nF	
40μF	10nF	
100μF	100nF	

- Overload protection: 250V DC or rms AC

3.2.7 Frequency

Range	Resolution	Accuracy
9.999Hz	0.001Hz	±（2.0% of reading + 5 digits）
99.99Hz	0.01Hz	±（1.5% of reading + 5 digits）
999.9Hz	0.1Hz	
9.999kHz	1Hz	
99.99kHz	10Hz	±（2.0% of reading + 5 digits）
199.9kHz	100Hz	
>200kHz		for reference only

- by Hz range:

  Measurement range: 0 ~ 200kHz

  Input voltage range: 0.5V – 10V rms AC (higher input voltage at higher frequency)

  Overload protection: 250V DC or rms AC

- by V range:

  Measurement range: 0 ~ 40kHz

  Input voltage range: 0.5V – 750V rms AC (higher input voltage at higher frequency)

  Input Impedance: 10MΩ

  Max. input voltage: 1000V DC or 750V rms AC

- by mV, μA, mA or A range:

  Measurement range: 0 ~ 40kHz

  Input current range: ≥ 1/4 range rms AC (higher input voltage at higher frequency)

- Max. input current:

  V jack（mV ranges）: 400mV

  mA jack（μA ranges）: 4mA,

  mA jack（mA ranges）: 400mA,

  10A jack: 10A

- Overload Protection:

  mV ranges: 250V DC or rms AC

  μA、mA ranges: resettable fuses F1 500mA/250V

  10A range: F2 10A/250V fuse (quick acting).

NOTE:

When measuring frequency, the range by Hz range is larger than that by the Hz of voltage range or current range, but the value measured beyond the range is for reference only.

3.2.8 Duty

Range	Resolution	Accuracy
0.1 - 99.9%	0.1%	± 3.0%

- By Hz range:

  Frequency response: 0 ~ 200kHz

  Input voltage range: 0.5V – 10V rms AC (higher input voltage at higher frequency)

  Overload protection: 250V DC or rms AC (higher input voltage at higher frequency)

- By V range:

  Frequency response: 0 ~ 40kHz

Input voltage range: 0.5V – 600V rms AC (higher input voltage at higher frequency)

Input Impedance: 10MΩ

Max. Input Voltage: 1000V DC or 750V rms AC

- By mV, μA, mA or A range:

Frequency response: 0 ~ 40kHz

Input current range: ≥1/4 of the rms AC for the range (higher input voltage at higher frequency)

- Max. input current:

V jack（mV ranges）: 400mV

mA jack（μA ranges）: 4mA,

mA jack（mA ranges）: 400mA,

10A jack: 10A

- Overload protection:

mV ranges: 250V DC or rms AC

μA、mA ranges: resettable fuses F1 500mA/250V

10A range: F2 10A/250V fuse (quick acting).

NOTE:

The range by DUTY of the Hz range is larger than that of the voltage range or current range.

3.2.9 Relative Humidity（on RH and humidity display）

Range	Resolution	Accuracy
20 - 95%	0.1%	± 5.0%RH

- Operating temperature: 0℃ to 40℃
- Sampling Cycle: ~20s.

3.2.10 Temperature

3.2.10.1 Temperature（on sensor, thermoresistor NTC and temperature display）

Range	Resolution	Accuracy	
℃	0.1℃	0℃ to 40℃	± 2℃
℉	0.1℉	32℉ to 104℉	± 4℉

Sampling Cycle: ~20s.

3.2.10.2 Temperature（on sensor, infrared thermocouple and main display）

Range	Resolution	Accuracy	
℃	1℃	-20℃ to 270℃	± (2.0% of reading + 3 digits)
		-270℃ to 300℃	± 4.0% of reading
℉	1℉	-4℉ to 520℉	± (2.0% of reading + 6 digits)

3.2.11 Sound Level（dB）

Range	Resolution	Accuracy
40-100dB	0.1 dB	± 3.5%dB at 94dB, 1kHz sine wave

- Typical instrument frequency range: 100 ~ 8000Hz

3.2.12 Continuity Test

Range	Function
•ᵢᵢ)	Built-in buzzer will sound if resistance is lower than 40Ω.

- Open circuit voltage ~0.5V
- Overload Protection: 250V DC or rms AC

3.2.13 Luminance（Lux）

Range	Resolution	Accuracy
Lux (4000)	1 Lux	±（5.0% of reading + 10 digits）at color temp. 2856K calibrated to standard incandescent lamp
×10Lux (40000)	10Lux	

- Repeatability: ±2%.

3.2.14 Diode Test

Range	Resolution	Function
▶|	1mV	displaying approximate forward voltage of diode

- Forward DC current ~1mA
- Reversed DC voltage ~1.5V
- Overload Protection: 250V DC or rms AC

3.2.15 Transistor hFE

Range	Function
hFE	Displaying approximate hFE value 1-1000 β for transistor under test (ALL TYPE)

- Base current: ~10μA，Vce: ~2V
- Overload protection: resettable fuses F1 500mA/250V.

4. OPERATING INSTRUCTION

4.1 MISCONNECTION ALARM

The input jacks of the meter are equipped with sound and light alarms against misconnection of test leads.

4.1.1 At V、Ω、Hz、Duty、⊣⊢、▶| ranges:

1）The red lights at the “IN” and “COM” jacks will be off after the test leads are plugged in.

2）The buzzer will sound upon misconnection of the test leads in the “mA” or “10A” jacks to warn the user. At the same time, the lights at the “IN” and “COM” jacks will flash to remind the user to plug in the test leads there.

4.1.2 At μA、mA, hFE ranges：

1）The red lights at the “mA” and “COM” jacks will be off after the test leads are plugged in.

2）The buzzer will sound upon misconnection of the test leads in the “IN” or “10A” jacks to warn the user. At the same time, the red lights at the “mA” and “COM” jacks will flash to remind the user to plug in the test leads there.

4.1.3 At 10A range：

1) The red lights at the “10A” and “COM” jacks will be off after the test leads are plugged in.

2) The buzzer will sound upon misconnection of the test leads in the “IN” or “mA” jacks to warn the user.

At the same time, the lights at the “10A” and “COM” jacks will flash to remind the user to plug in the test leads there.

4.1.4 At IR-T range, whether the test leads are plugged in or otherwise, the meter will make no response because no signal input is required from the input terminals.

4.2 HOLDING READINGS

1）Press the “HOLD/B.L” button to hold the readings while taking measurement, and the value on the display will be held.

2） Press the “HOLD/B.L” button again to release the READING HOLD function.

4.3 SWITCHING FUNCTIONS

1）Press the " SELECT " button to switch between AC and DC measurement at the current and voltage ranges.

2） Press the " SELECT " button to switch among resistance, diode and continuity ranges.

4.4 SWITCHING RANGES

1） When the meter is turned on, it is at the auto range mode for measuring current, voltage and resistance.

2） Press the "RANGE" button for manual range mode. The range will go up one level at each press and return

to the lowest level when the highest level is reached.

3） Press the "RANGE" button for two or more seconds to return to the auto range.

4.5 SWITCHING BETWEEN FREQUENCY/DUTY

1） Press the “Hz/DUTY” button at the frequency range to switch between frequency and duty measurement.

2） When the meter is at the voltage and current ranges, press the “Hz/DUTY” button to measure the frequency of the voltage or current signal. Another press on the “Hz/DUTY” button will change into the Duty range for measuring the duty cycle of the voltage or current signal.

3） Press the “Hz/DUTY” again to resume the meter to voltage and current measurement at the manual range mode.

4.6 SWITCHING TO RELATIVE MEASUREMENT

1 ） Press the “REL” button to enter the relative measurement mode when taking measurements. The initial reading will resume zero.

2） At the relative measurement mode, the existing reading will be stored in the memory as reference value for later measurements. The displayed reading is the difference between the input value and reference value. i.e.

REL (present reading) = input value - reference value

3）The meter will enter the manual range mode after the “REL” button is pressed. REL mode is not available for Hz/Duty range because it is an automatic range.

4) Press the “REL” button again to cancel the relative measurement function.

5） Pressing the “REL” button at the HOLD mode will cancel the HOLD function. The actual measurement value taken will be stored in the memory as reference value. The readings displayed for measurements taken afterwards will be the difference between the input value and the reference value.

6）Press the “RANGE”, “SELECT” buttons or turning the rotary selector to cancel the relative measurement function and resume normal measurement. The REL symbol on the display will disappear.

7）OL triggering: Under the REL mode, OL (over limit) will flash on the display if the input value exceeds the allowed value for that range. Press the “REL” button again to cancel the relative measurement function. The REL mode cannot be entered when OL is flashing.

4.7 BACK LIGHT

1）Press the ”HOLD/B.L” button for two or more seconds to switch on the back light if the light in the environment is too dim for taking reading,.

2）Press the “HOLD/B.L” button for two or more seconds

again to switch off the back light.

3 ） The back light will go off automatically after 10 seconds.

NOTE:

1) LED, which requires a larger working current, is the main source of back light. Although the meter is equipped with a timer set at 10 seconds (i.e. the back light will be off automatically after 10 seconds), frequent use of the back light will shorten the life of the batteries. Therefore, do not use the back light unless necessary.

2) When the battery voltage is ≤3.6V, the symbol “ ” （battery low）will appear on the LCD. When the back light is on, even if the batter is ≥3.6V, the “ ” may appear because of its large working current which will cause the voltage to drop. (The accuracy of the measurement cannot be assured when the “ “ symbol appears.) In this case, you need not replace the batteries yet. Normally, the batteries can last until the “ ” appears when the back light is not being used.

4.8 LASER BEAM

Press the “ ” button for infrared temperature measurement. A laser beam will be transmitted to facilitate targeting at the object for more accurate result.

NOTE:

1) The laser pointer requires a larger working current. Frequent use of laser beam will shorten the life of the batteries. Therefore laser beam should not be used unless necessary.
2) When the battery voltage is ≤3.6V, the symbol " " （battery low） will appear on the LCD. When laser beam is being used, even if the batter is ≥3.6V, the " " may appear because of its large working current which will cause the voltage to drop. (The accuracy of the measurement cannot be assured when the " " symbol appears.) In this case, you need not replace the batteries yet. Normally, the batteries can last until the " " appears when laser beam is not being used.

4.9 AUTO POWER OFF

1） If there is no any operation within any thirty minute period after the power is on, the meter will enter the auto power off mode.

2）Turn the rotary selector or press any of the "HOLD/B.L", "SELECT", "RANGE", "Hz/DUTY" or "REL" button to resume operation of the meter under auto the power off mode.

3）Press the "SELECT" button to disable the auto power off function.

4.10 PREPARATING FOR MEASUREMENT

4.10.1 Switch on the power by turning the rotary selector. If the battery voltage is lower than 3.6V, the " " symbol will appear and the batteries should be replaced.

4.10.2 The " " symbol beside the input lead shows that the input voltage or current should not exceed the specified value in order to protect the internal circuit from damage.

4.10.3 Turn the rotary selector to the required function and range to be measured. Under the manual mode, choose the highest range when the value scale to be measured is unknown.

4.10.4 Connect the common test lead first and then the charged test lead when making connection. Take away the charged test lead first when disconnecting.

4.11 MEASURING RELATIVE HUMIDITY

4.11.1 This function is used for measuring the ambient humidity around the meter.

4.11.2 Turn the rotary selector away from the OFF position.

4.11.3 The current ambient humidity will be shown on the humidity display of the LCD.

NOTE:

1）The humidity sensor is placed inside the front part of the meter and therefore it may take a longer time to reach

balance with the environment being measured. Furthermore, it takes a longer intermission time, about 20 seconds, for sampling and the meter has to be exposed to the environment for a longer time for accurate reading. Hence it is not suitable for measuring rapidly changing ambient humidity.

2）It will take some time for a steady RH reading when the ambient humidity changes.

4.12 MEASURING TEMPERATURE (WITH THERMO-RESISTOR)

4.12.1 This function is used for measuring the ambient temperature around the meter.

4.12.2 Turn the rotary selector away from the OFF position.

4.12.3 The current ambient temperature will be shown on the temperature indicator of the LCD.

4.12.4 Press the "℃/℉" button to switch between ℃ and ℉ measurement.

NOTE:

1）The temperature sensor (thermo-resistor) is placed inside the front part of the meter and therefore it may take a longer time to reach thermal balance with the environment. Furthermore, it takes a longer intermission time, about 20 seconds, for sampling and the meter has to be exposed to the environment for a longer time for accurate reading. Hence it is not suitable for measuring rapidly changing ambient

temperature.

2）The working temperature of the meter is 0 ~ 40℃. As the temperature sensor is placed inside the meter, this function is applicable for measuring ambient temperature between 0 and 40℃.

3）If exposed to an environment beyond 0 ~ 40℃, the meter may show a wider range of temperature measurement, but the accuracy cannot be ensured and damage to the meter may be caused.

4.13 MEASURING DC VOLTAGE

⚠ WARNING

Beware of electrocution.

Pay special attention to avoid electric shock when measuring high voltage.

Do not input any voltage over 1000V DC, which may destroy the internal circuit, although a higher voltage can be shown.

4.13.1 Plug the black test lead into the COM jack and the red test lead into the V jack.

4.13.2 Set the rotary ⎓V range position.

4.13.3 Press the "SELECT" button to switch to DC measurement. Then press the “RANGE” button to choose the auto range or manual range mode.

4.13.4 Connect the test leads to the voltage source or load for measurement.

4.13.5 Take the reading on the main indicator of the LCD.

The polarity symbol denotes the polarity of the end connected by the red test lead.

NOTE:

1) At small voltage range, unsteady readings will appear before the test leads contact the circuit. This is normal because the meter is highly sensitive. When the test leads contact the circuit, the true reading will be shown.
2) Under the manual range mode, when only ‘OL’ or ‘-OL’ is shown on the LCD, it means the measurement has exceeded the range. A higher range should be selected.
3) Under the manual range mode, when the scale of the value to be measured is unknown beforehand, select the highest range first and lower the range gradually.

4.14 MEASURING AC VOLTAGE

⚠ WARNING

Beware of Electrocution.

Pay special attention to avoid electric shock when measuring high voltage.

Do not input any voltage 750V rms AC, which may destroy the inner circuit, although a higher voltage can be shown.

4.14.1 Plug the black test lead into the COM jack and the red test lead into the V jack.

4.14.2 Set the rotary ⎓ V range position.

4.14.3 Press the "SELECT" button to switch to AC measurement. Then press the “RANGE” button to choose the auto range or manual range mode.

4.14.4 Connect the test leads to the voltage source or load terminals for measurement.

4.14.5 Take the reading on the main indicator of the LCD.

NOTE:

1) At small voltage range, unsteady readings may appear before the test leads contact the circuit. This is normal because the meter is highly sensitive. When the test leads contact the circuit, the true reading will be shown.
2) At the manual range mode, when only ‘OL’ or ‘-OL’ is shown on the LCD, it means the measurement has exceeded the range. A higher range should be selected.
3) At the manual range mode, when the scale of the value to be measured is unknown beforehand, select the highest range first and lower the range gradually.

4.15 MEASURING DC MILLIVOLTAGE

4.15.1 Plug the black test lead into the COM jack and the red test lead into the V jack.

4.15.2 Set the rotary s ⎓ mV range position.

4.15.3 Press the "SELECT" button to switch to DC measurement. Then press the “RANGE” button to choose the auto range or manual range mode.

4.15.4 Connect the test leads to the voltage source or load terminals for measurement.

4.15.5 Take the reading on the main indicator of the LCD. The polarity symbol denotes the polarity of the end

NOTE:

1) When the input is open, unsteady readings may appear. This is normal because the meter is highly sensitive. When the test leads contact the circuit, the true reading will be shown.
2) At the manual range mode, when only ‘OL’ or ‘-OL’ is shown on the LCD, it means the measurement has exceeded the range. A higher range should be selected.
3) At the manual range mode, when the scale of the value to be measured is unknown beforehand, set the rotary selector to the highest range.

4.16 MEASURING AC MILLIVOLTAGE

4.16.1 Plug the black test lead into the COM jack and the red test lead into the V jack.

4.16.2 Set the rotary ⎓ mV range

position.

4.16.3 Press the "SELECT" button to switch to AC measurement. Then press the “RANGE” button to choose the auto range or manual range mode.

4.16.4 Connect the test leads to the voltage source or load terminals for measurement.

4.16.5 Take the reading on the main indicator of the LCD.

NOTE:

1) When the input is open, unsteady readings may appear. This is normal because the meter is highly sensitive. When the test leads contact the circuit, the true reading will be shown.
2) At the manual range mode, when only ‘OL’ or ‘-OL’ is shown on the LCD, it means the measurement has exceeded the range. A higher range should be selected.
3) Under the manual range mode, when the scale of the value to be measured is unknown beforehand, set the rotary selector to the highest range.

4.17 MEASURING DC CURRENT

⚠ WARNING

Beware of Electrocution.

Turn off the power of the circuit to be measured before connecting the meter to the circuit.

4.17.1 Plug the black test lead into the COM jack. When the current to be measured is under 400mA, plug the red test lead into the mA jack; when the current to be measured is over 400mA but under 10A, plug the red test lead into the 10A jack.

4.17.2 Set the rotary ⎓ A range position.

4.17.3 Press the "SELECT" button to switch to DC measurement. Then press the “RANGE” button to choose the auto range or manual range mode.

4.17.4 Connect the test leads to the circuit for measurement.

4.17.5 Take the reading on the main indicator of the LCD. The polarity symbol denotes the polarity of the end connected by the red test lead.

NOTE:

1) At the manual range mode, when only ‘OL’ or ‘-OL’ is shown on the LCD, it means the measurement has exceeded the range. A higher range should be selected.
2) At the manual range mode, when the scale of the value to be measured is unknown beforehand, set the range to the highest.
3) “ ⚠” means the maximum current of the mA jack is 400mA and the maximum current of the 10A jack is 10A. At the 10A jack, current exceeding the limit will blow the fuse.

4.18 MEASURING AC CURRENT

⚠ WARNING

Beware of Electrocution.

Turn off the power of the circuit to be measured before connecting the meter to the circuit.

4.18.1 Plug the black test lead into the COM jack. When the current to be measured is under 400mA, plug the red test lead into the mA jack; when the current to be measured is over 400mA but under 10A, plug the red test lead into the 10A jack.

4.18.2 Set the rotary ⎓ A range position.

4.18.3 Press the "SELECT" button to switch to AC measurement. Then press the “RANGE” button to choose the auto range or manual range mode.

4.18.4 Connect the test leads to the circuit for measurement.

4.18.5 Take the reading on the main indicator of the LCD.

NOTE:

1) At the manual range mode, when only ‘OL’ or ‘-OL’ is shown on the LCD, it means the measurement has exceeded the range. A higher range should be selected.
2) Under the manual range mode, when the scale of the value to be measured is unknown beforehand, set the range to the highest.
3) ⚠” means the maximum current of the mA jack is

400mA and the maximum current of the 10A jack is 10A. At the 10A jack, current exceeding the limit will blow the fuse.

4.19 MEASURING FREQUENCY

4.19.1 Plug the black test lead into the COM jack and the red test lead into the Hz jack.

4.19.2 Set the rotary selector to the Hz range position (or press the “Hz/DUTY” button at the AC/DC V range to switch to Hz measurement).

4.19.3 Connect test leads to the two ends of the source or load for measurement.

4.19.4 Take the reading on the main indicator of the LCD.

4.20 MEASURING DUTY

4.20.1 Plug the black test lead into the COM jack and the red test lead into the Hz jack.

4.20.2 Set the rotary selector to the Hz range position.

4.20.3 Press the "Hz/DUTY" button to switch to DUTY measurement (or press the “Hz/DUTY” button at the AC/DC V range to switch to DUTY measurement).

4.20.4 Connect test leads to the two end of the source or load for measurement.

4.20.5 Take the reading on the main display of the LCD.

4.21 MEASURING RESISTANCE

⚠ WARNING

Beware of Electrocution.

When measuring in-circuit resistance, make sure that the power of the circuit under test has been turned off and that all capacitors have been fully discharged.

4.21.1 Plug the black test lead into the COM jack and the red test lead into the Ω jack.

4.21.2 Set the rotary selector to the Ω•))) ▶| range position.

4.21.3 Press the "SELECT" button to switch to Ω measurement. Then press the “RANGE” button to choose the auto range or manual range mode.

4.21.4 Connect the test leads to the ends of the resistor or circuit for measurement.

4.21.5 Take the reading on the main indicator of the LCD.

NOTE:

1) At the manual range mode, when only ‘OL’ or ‘-OL’ is shown on the LCD, it means the measurement has exceeded the range. A higher range should be selected.
2) When the input is open, ‘OL’ will appear on the LCD to indicate that the range has been exceeded.
3) For measuring resistance above 1MΩ, it may take a few seconds to get a steady reading. This is normal for high resistance reading.

4.22 MEASURING CAPACITANCE

⚠ WARNING

Beware of Electrocution.

To avoid electric shock, make sure that the capacitors have been fully discharged before measuring the capacitance of a capacitor.

4.22.1 Plug the black test lead into the COM jack and the red test lead into the ⊣⊢ jack.

4.22.2 Set the rotary selector to the ⊣⊢ range position.

4.22.3 After fully discharged the capacitor, connect the test leads to the two ends of the capacitor for measurement.

4.22.4 Take the reading on the main indicator of the LCD.

NOTE:

1) It may take some time (about 30 seconds for the 200μF range) for steady readings when measuring high capacity.
2) Sometimes a reading may appear when the circuit is open. In such case, press the “REL” button to reset the reading and take measurement again.

4.23 TESTING DIODE

4.23.1 Plug the black test lead into the COM jack and the red test lead into the ▶|jack.

4.23.2 Set the rotary selector to the Ω•))) ▶| range position.

4.23.3 Press the "SELECT" button to switch to ▶| test.

4.23.4 Connect the red test lead to the anode and the black test lead to the cathode of the diode for testing.

4.23.5 Take the reading on the main indicator of the LCD.

NOTE:

1) The meter will show the approximate forward voltage drop of the diode.
2) When the test leads have been reversed or open, ‘OL’ will appear on the LCD.

4.24 TESTING CONTINUITY

⚠ WARNING

Beware of Electrocution.

Make sure that the power of the circuit has been turned off and the capacitors have been fully discharged before testing the continuity of a circuit.

4.24.1 Plug the black test lead into the COM jack and the red test lead into the Ω jack.

4.24.2 Set the rotary selector to the Ω•))) ▶| range position.

4.24.3 Press the “SELECT” button to switch to •))) for continuity test.

4.24.4 Connect the test leads to the two ends of the circuit for measurement.

4.24.5 If the resistance of the circuit being tested is less than 40Ω, the built-in buzzer will sound.

4.24.6 Read the resistance on the main indicator of the LCD.

NOTE:

If the test leads are open or the resistance of the circuit is over 400Ω, “OL” will appear on the LCD.

4.25 MEASURING TEMPERATURE (NON-CONTACT) (WITH INFRARED THERMO-SENSOR)

⚠ WARNING

Do not point a laser beam at human eyes. Despite the low power of the laser beams, damage to the eyes may be caused if they are exposed to laser beams for a long time.

To avoid damage to the meter, do not connect the input plug to any electric signal.

4.25.1 Turn the rotary selector to the IR-T range position.

4.25.2 Aim the foreside of the meter (infrared sensor) at the surface to be measured.

4.25.3 To ensure that the infrared sensor is targeted at the object to be measured, press the “▲”button to turn on the laser beam with the red spot positioned at the centre of the surface to be measured.

4.25.4 Press the "℃/℉" button to choose ℃ or ℉ measurement.

4.25.5 Take the reading on the LCD.

NOTE:

1） The infrared temperature sensor is placed inside the front part of the meter. It may take a longer time to reach thermal balance with the environment. Therefore the meter should be exposed to the environment for a longer time for accurate reading.

2） The meter is designed to have a emissivity ε=0.95, which is the rate for most objects. When measuring objects with a different reflection rate, different results may appear.

3）The following diagram shows the surface diameter and distance of the object to be measured.

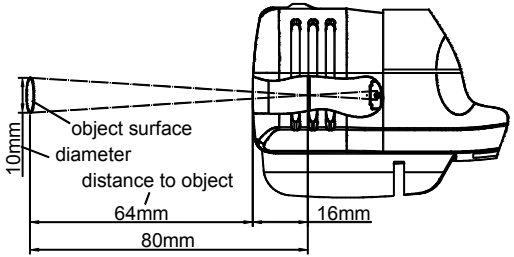

Diameter and distance ratio: the ratio that determines the surface diameter of the object being measured to the distance between the object and the lens of the meter. For example, if the surface diameter of the object is 10mm, the distance between the object and the meter

should be ≤ 80mm (including the 16mm distance from the surface of the meter to the lens).

4） Make suitable adjustment so that the distance and diameter ratio between the distance between the object and the lens of the meter and the surface diameter of the object being measured is smaller than 8:1 to avoid the measurement result being affected by such causes as failure to target at the object.

5）Clean the surface of the object to get rid of any frost, oil, grime, etc. before taking measurements.

6） Apply masking tape or flat black paint to the surface before taking measurement If the surface of the object is highly reflective.

7）Larger discrepancy may result if measurement is taken by the meter through transparent materials such as glass.

8） Steam, dust, smoke, etc. may affect measurements.

4.26 TESTING TRANSISTOR

4.26.1 Set the rotary selector to the hFE range position.

4.26.2 Put two plugs '-' and '+' of transistor test socket into **COM** jack and **hFE** jack respectively.

4.26.3 Identify whether the transistor is NPN or PNP type and insert emitter, base and collector leads into the proper holes of the transistor on the transistor test socket for testing.

4.26.4 Take the reading on the main indicator of the LCD.

NOTE：

Do not put the plug into the wrong jack.

5. MAINTENANCE

5.1 REPLACING THE BATTERIES

⚠ WARNING

To avoid electric shock, make sure that the test leads have been clearly move away from the circuit under measurement before opening the battery cover of the meter.

5.1.1 If the sign " " appears, it means that the batteries should be replaced.

5.1.2 Loosen the fixing screw of the battery cover and remove it.

5.1.3 Replace the exhausted batteries with new ones.

5.1.4 Put the battery cover back and fix it again to its origin form.

NOTE:

Do not reverse the poles of the batteries.

5.2 REPLACING FUSE

5.2.1 Fuses rarely need replacement. Almost all blows are the result of operation errors.

5.2.2 Loosen the fixing screw of the battery cover and remove it.

5.2.3 Replace the blown fuse with one at the specified rating.

5.2.4 Put the battery cover back and fix it again to its original form.

⚠ WARNING

To avoid electric shock, make sure that the test leads have been clearly move away from the circuit under measurement before opening the battery cover of the meter.

For protection against fire hazard, replace fuses with specified ratings only: F 10A/250V (quick acting).

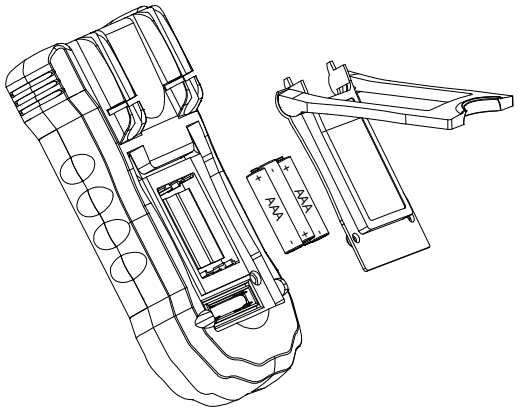

5.3 REPLACING TEST LEADS

⚠ WARNING

The replacement must be test leads in good working condition with the same or equivalent rating: 1000V 10A.

A test lead must be replaced if the insulation layer has been damaged, e.g. the wire inside is exposed.

6. ACCESSORIES

1) Test leads: electric rating: 1000V 10A	1 pair (set)
2) Transistor Test Socket	1 set
3) Operation Manual	1 copy